2013X HIGH DENSITY EXTRUDER

Hydraulic Ram Press for
Effective Coolant Recovery & Recycling

- Produces dry swarf for disposal or recycling
- Efficient coolant recovery
- Clean unattended operation
- Rapid return on investment
- Effective fully perforated dewatering chamber
- Over 500 installations worldwide

127 N. Water St. Hopkins, MI 49328
800-253-0532
www.sebrightproducts.com

SEBRIGHT PRODUCTS INC.

HIGH DENSITY EXTRUDER

Manufacturing Sectors use the High Density Extruder

- Transmission Plants
- Machined Parts Manufacturers
- Auto Parts Plants & Suppliers
- Metal Grinding Processes
- Aircraft Parts Manufacturing
- Agricultural Implement Equipment Mfg

Tough & Efficient for a full range of applications

- Heavy duty construction
- Coolant recovery of up to 40% by volume
- Simple, Low maintenance design
- Low energy requirement, Only 5 HP
- Lowest cost of operation and ownership

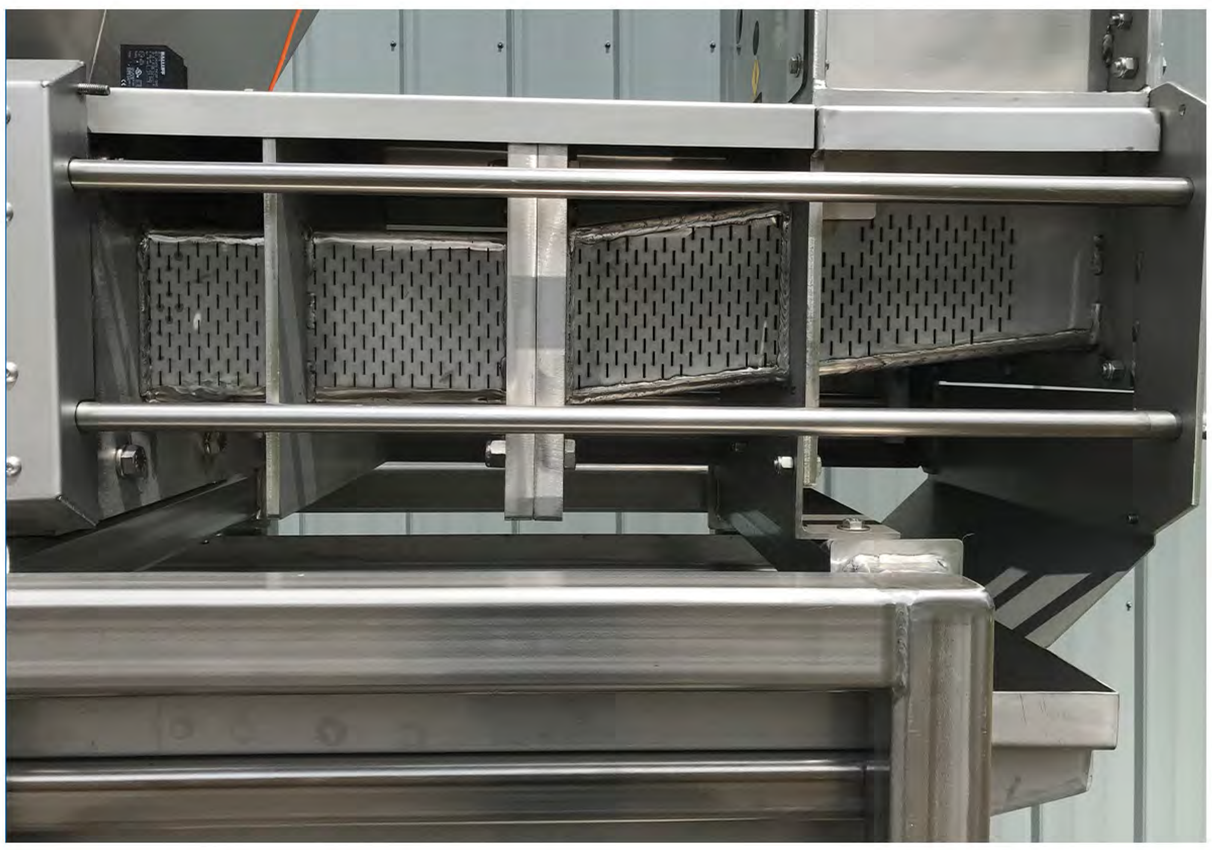

Dewatering Chamber shown

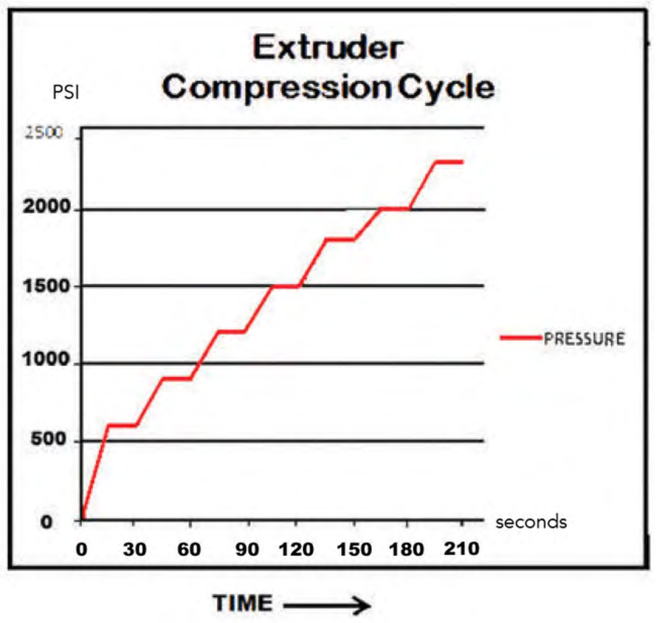

HIGH DENSITY EXTRUDER

*A Larger 3024XS Model Available

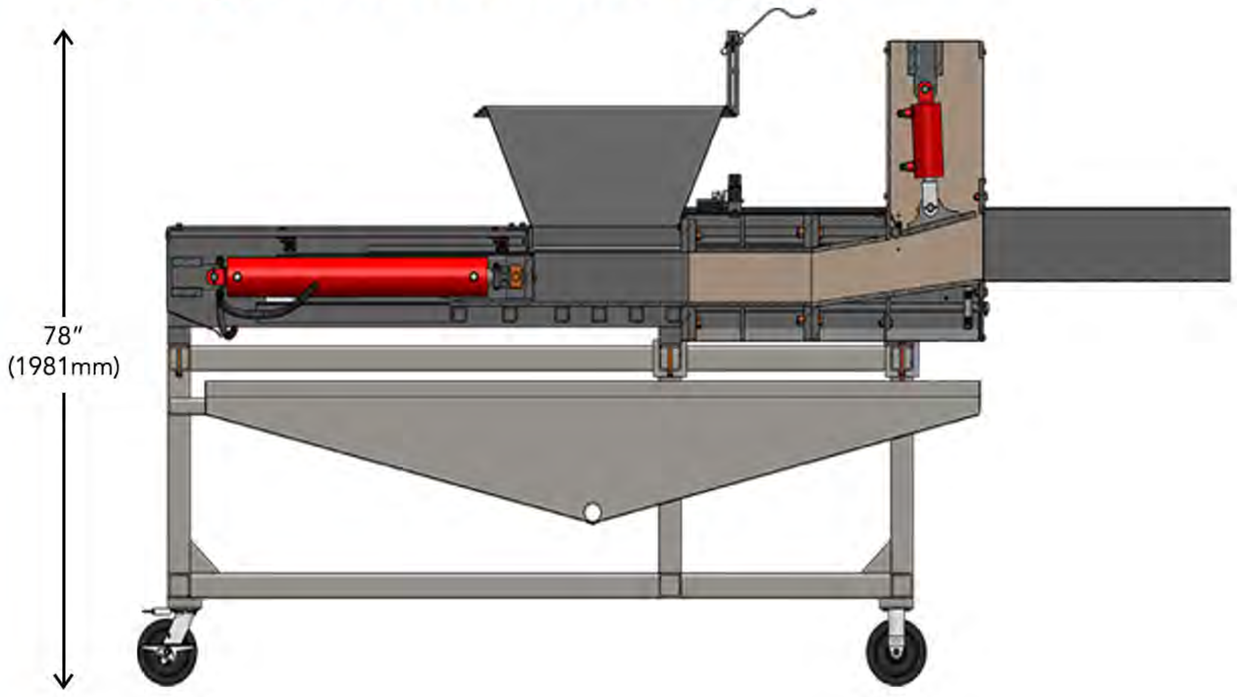

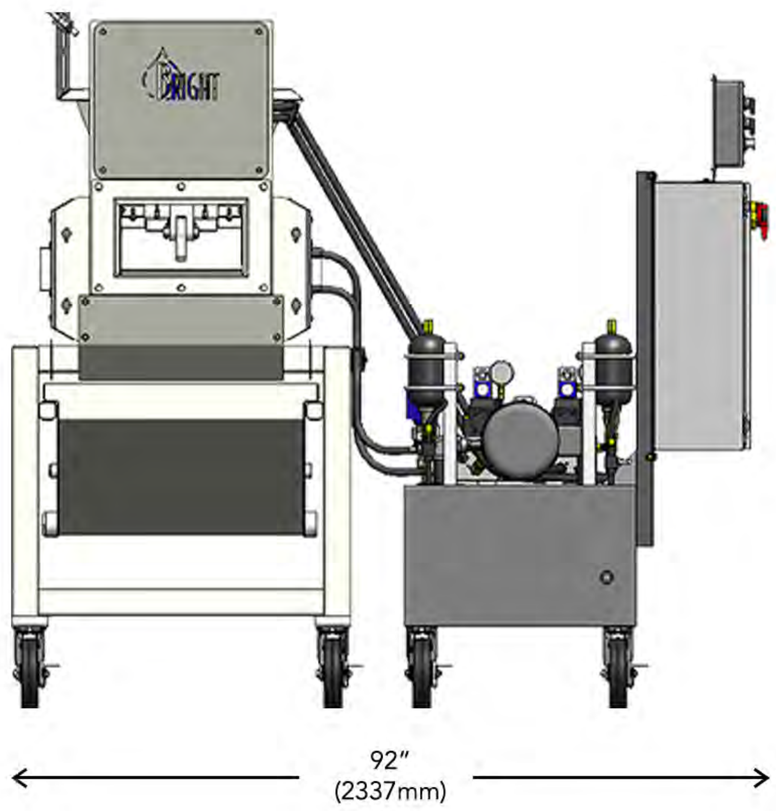

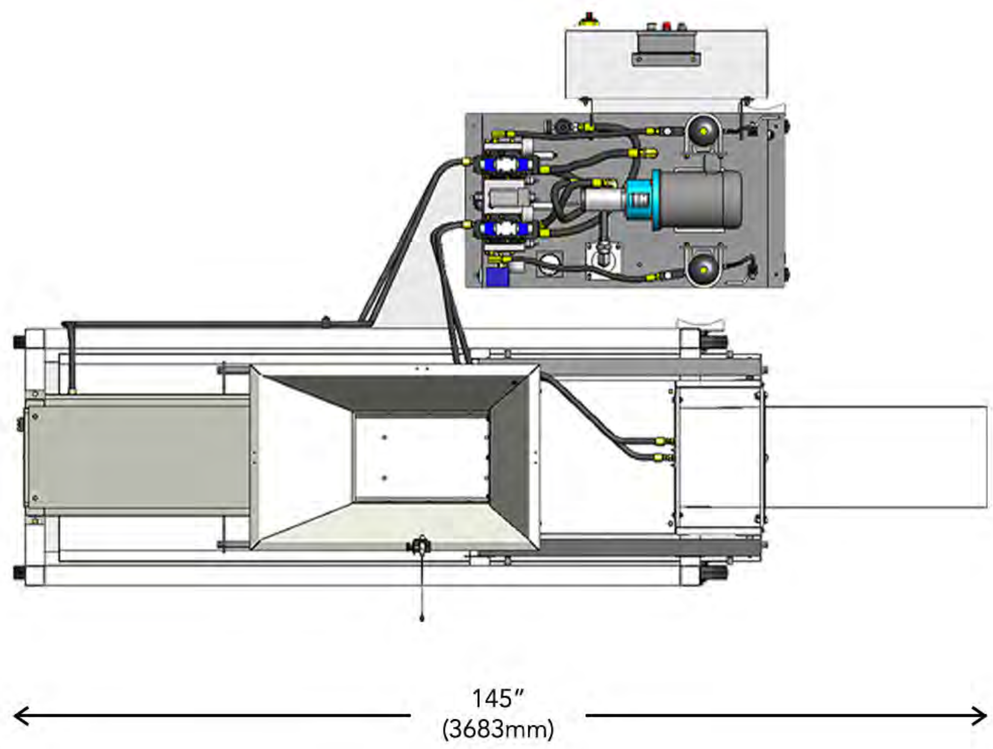

* All dimensional data for reference only

* Due to product improvement, the manufacturer reserves the right to alter, or amend, without notice, any of these specifications and dimensions.

Rugged, Reliable Operation

Sebright Products High Density Extruders were originally designed in 1992 to dewater wet rejects from the pulp & paper industry where they routinely run around the clock unattended. This demanding application requires the equipment to accept a wide variety of materials and be durable and low maintenance. Our High Density Extruder was first customized for coolant recovery on grinding swarf applications in 1996 for the auto industry. A wide range of metal grinding applications have benefited from this unique and robust equipment solution.

Our 30+ years of experience and continuous improvement has produced a very effective, user friendly coolant recovery solution.

Timed pressure management for superior dewatering performance

Only Sebright Products offers the benefit of a time managed compression cyle. Incremental increase of the ram force over the timeallows optimum dewatering performance. Others that use simple reciprocating ram cycles cannot achieve the superior results of the High Density Extruder.

Proprietary PLC operated ADCS

Automated Dewatering Control System
Our PLC monitors & maintains both the compression ram and the discharge restritor plate pressures. Proprietary control logic (ADCS) automatically controls the restrictor plate hydraulic pressure to allow material to discharge after dewatering and compression parameters are attained. This allows a wide range of material to be dewatered without additional operator attention.

While Sebright Products, Inc., strives to make the information provided on processing of your waste or recycling stream, as timely and accurate as possible, the company makes no claims, promises or guarantees about the accuracy, completeness, or adequacy of any of the provided information, and expressly disclaims liability of errors and omissions in the content of the information, or analysis provided to your company. It is solely the responsibility of each recipient of the information Sebright Products, Inc., has provided to satisfy itself as to the accuracy of the information provided by Sebright Products, Inc., and as to the efficacy of the product(s) for the use(s) intended.

HIGH DENSITY EXTRUDER

Recycling Equipment for Metal Grinding Swarf

Many Industries such as Automotive, Aerospace, Recreational Vehicle and Farm Equipment manufacturing use abrasive grinding processes using petroleum or synthetic cutting fluids and coolants to machine precision parts for their products. These processes create a material commonly known as "Swarf" that is a mixture of metal particles, cutting fluids, cellulose and abrasives from the grinding wheels.

As you can imagine from the picture above, swarf can be very problematic to deal with because the fine metal and abrasive materials have a very large surface area for the cutting fluids to cling to. Unprocessed swarf is often over 50% by weight cutting fluid. This combination waste material is often classified as a special waste and very expensive to dispose of. Oil based cutting fluids can be $10 - $20 per gallon and can be reused if separated from the swarf and filtered. The metal in the swarf can also have value depending on the alloy being processed.

Sebright Products has been providing our High Density Extruders for swarf processing applications since 1996. The High Density Extruder is a hydraulic ram press that features a robust, low maintenance design and a very low energy requirement. Our model 2013X is powered by a single 5HP

Recently we tested two 55 gallon drums of swarf from an automotive manufacturer with our skid mounted 2013X demonstration unit. The skid mounted unit features a propane fueled power unit and does not require external power making it ideal for onsite testing of a clients material. For Grinding swarf the dewatering chamber is perforated with tapered slots.

The swarf was placed into 5 gallon buckets and each bucket of swarf was weighed and recorded before feeding it into the machines hopper so the total weight of input material would be known.

The Extruder cycle consists of several ram stops of increasing pressure on the wet swarf. Starting out at low ram pressure and increasing pressure over time allows much of the cutting fluid to be squeezed out of the swarf.

The swarf discharged from our Extruder is in a dry easily handled form. The material in the above picture is all of the swarf from two 55 gallon drums. All of this material was placed into one drum after processing to be sent back to the manufacturer.

All of the cutting fluid was captured and weighed at the end of

RESULTS:

- 375 lbs of swarf processed
- 216 lbs of valuable cutting fluid recovered, 57% by weight
- Volume of swarf reduced to 50% of original
- The dry swarf is now suitable for recycling the metals

Our High Density Extruder is a low maintenance and low energy alternative to a Briquetter or Chip Wringer.

2013X-V2